TECHNICAL DATA SHEET

OT-TK5-K6

Polyurethane timing belt · TK5

ORIONTEK
ENGINEERING GOOD SOLUTIONS

01 CONSTRUCTION

BELT	Profile / pitch	**TK5**
	Material	**Polyurethane**
	Hardness	**92 ° Shore A**
	Colour	**White**
CORDS	Standard cords	**Steel**

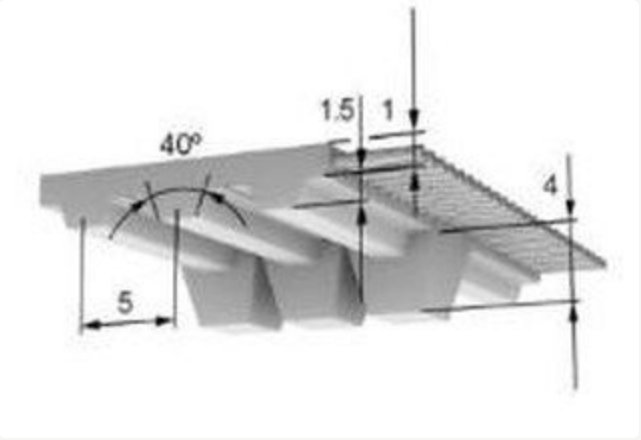

02 TECHNICAL SPECIFICATIONS

Width tolerance	**+/- 0.5 mm**
Height tolerance	**+/- 0.3 mm**
Length tolerance	**+/- 0.8 mm/m**
Weight	**+/- 20 g/10 mm belt width**
Standard widths (mm)	**10 to 100 mm**

03 PULLEYS [2]

Minimum number of pulley teeth				**25**
■ Minimum pulley diameter	**40**	mm	*1.57*	*in.*
■ Minimum counter-bending diameter	**60**	mm	*2.36*	*in.*

Oriontek service: supplied open length, endless-joined or truly endless; machined to customer drawing with welded cleats, profiles, tracking guides, backings and drilled holes. Matching timing pulleys and clamping plates available.

NOTES [1] Operating the belt at its limit values may reduce service life. [2] Pulley minimums depend on the cord type and belt tension specified by Oriontek.

DISCLAIMER Values are nominal. They describe the product as tested and do not necessarily reflect conditions of industrial use, nor do they guarantee suitability for a specific application. The customer remains responsible for correct selection and use. Oriontek cannot be held liable for damages arising from use of this product. Specifications may be revised without prior notice.