TECHNICAL DATA SHEET

OKCHN2706C

PU food-grade homogeneous belt · Blue pn · 2.50 mm
FDA compliant compound

ORIONTEK
ENGINEERING GOOD SOLUTIONS

01 CONSTRUCTION

TOP COVER	Material	**Polyurethane (TPU)**
	Surface	**PN**
	Colour	**Blue**
CARCASS	Fabric	**Traction core**

02 TECHNICAL SPECIFICATIONS

Total thickness	**2.50**	mm	*0.098*	*in.*
Weight			**0.59 lb/ft²**	
Load at 1% elongation	**8**	N/mm	*45.7*	*lbs/in.*
Temperature — minimum (1)	**–30**	°C	*–22*	*°F*
Temperature — maximum (1)	**90**	°C	*194*	*°F*
Max. production width	**2000**	mm	*79*	*in.*

03 MINIMUM PULLEY DIAMETER (2)

■ Back-flex (counter-bending) pulley	**120**	mm	*4.72*	*in.*

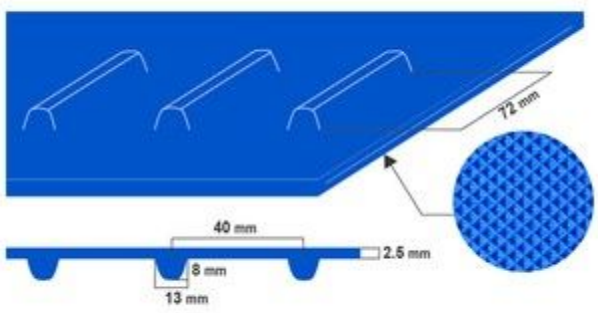

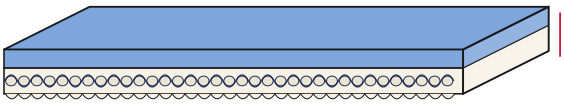

■ **PU COVER** blue · pn
□ **1-PLY TRACTION CORE** traction core
□ **FABRIC DRIVE FACE** fabric · drive side

CROSS-SECTION — NOT TO SCALE — **TOTAL 2.50 MM / IN.**

04 PROPERTIES

FDA compliant compound	**YES**
Metal detectable	**YES**

05 APPLICATION

Compact belt with traction core treated to. Typical uses: Food: seafood processing; Fruits and vegetables; Food: bakery; Food: sweet and salty snacks

Oriontek service: supplied endless-joined, open-length or fabricated with profiles, sidewalls, cleats and V-guides. Onsite splicing available.

NOTES (1) Operating the belt at its limit values may reduce service life. (2) Minimum pulley diameters depend on belt tension and on the splice or fastener specified by Oriontek.

DISCLAIMER Values are nominal. They describe the product as tested and do not necessarily reflect conditions of industrial use, nor do they guarantee suitability for a specific application. The customer remains responsible for correct selection and use. Oriontek cannot be held liable for damages arising from use of this product. Specifications may be revised without prior notice.